C-MOS 8-BIT DUAL SUPPLY VOLTAGE TRANSLATING TRANSCEIVER

—TOP VIEW—

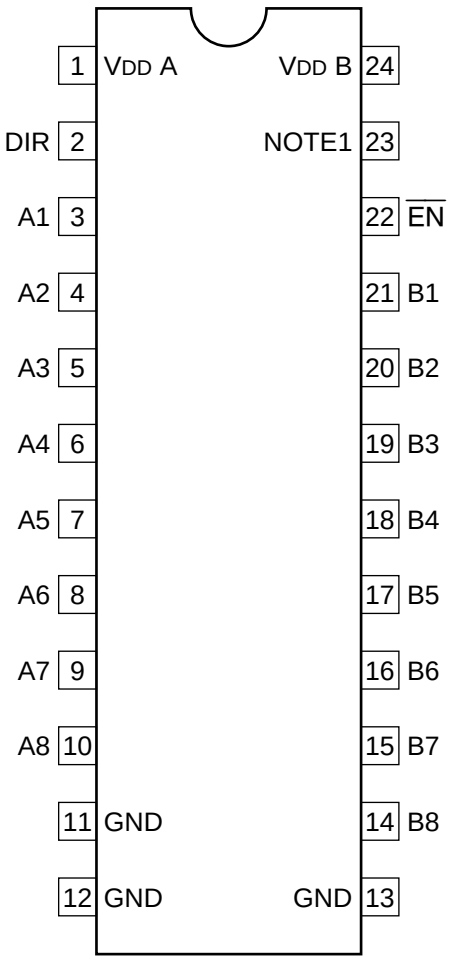

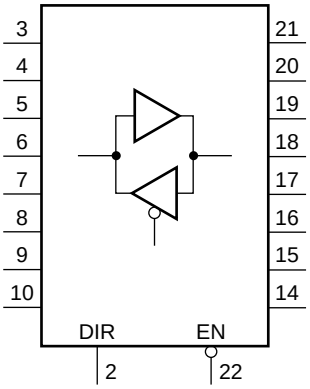

$\overline{EN}$	DIR	OUTPUT
0	0	B TO A
0	1	A TO B
1	×	HI-Z

0 : LOW LEVEL
1 : HIGH LEVEL
HI-Z : HIGH IMPEDANCE
× : DON'T CARE
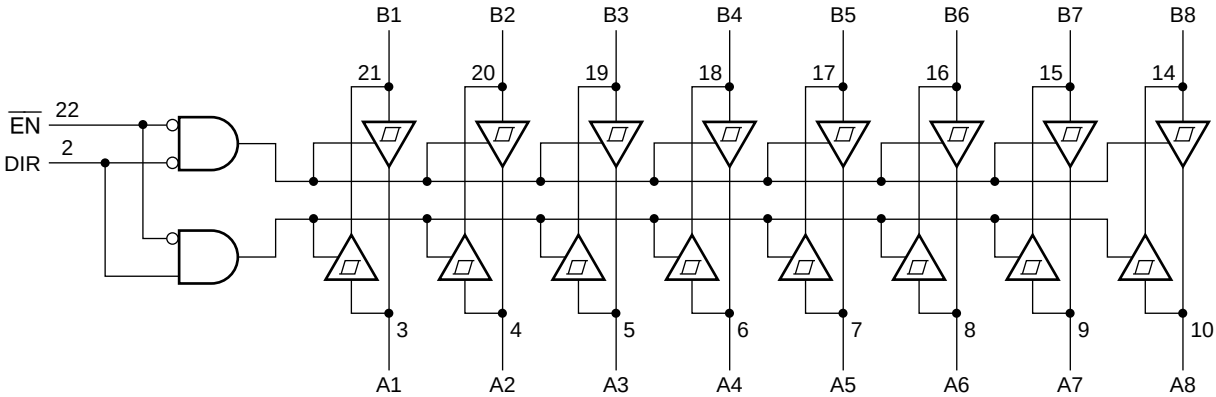
NOTE1
74LVX4245 : VDD B
74LVXC4245 : NC